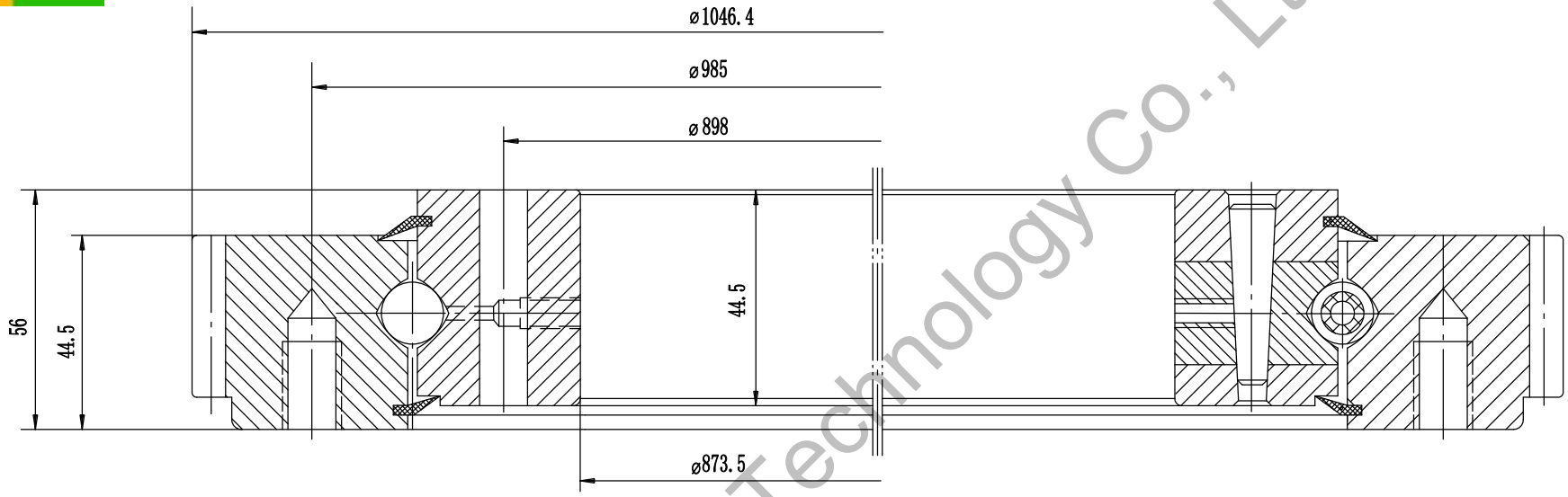

Remark:

1. Luoyang JCB Bearing Technology Co., Ltd is a technical Inc, specialize in designing and manufacturing slewing ring bearing, we can design and manufactur all kinds of slewing bearing according to client's requirement.
2. This drawing is reference for user, if you need formal drawing, please contact wth us sales@jcb-bearing.com, the official drawing will be submitted after order confirmation.

Contact information
Company Address : No. 285, Fenghua road, Luoyang, Henan, China.
Postal code : 471000
Phone : 86-379-68611678 Fax : 86-379-68611679
E-mail: sales@jcb-bearing.com
Reserved E-mail: sales@slewing-ring-bearings.com
Website: www.jcb-bearing.com
www.slewing-ring-bearings.com

Four-point contact ball Slewing Ring Bearing	Add: No. 285, Fenghua road, Luoyang, Henan, China. Postal: 471000 Phone: +86-379-68611678 Fax: +86-379-68611679 E-mail: sales@jcb-bearing.com
	Luoyang JCB Bearing Technology Co., Ltd
061.20.0944.575.01.1403	

Luoyang JCB Bearing Technology Co., Ltd